maidaid halcyon

C40

Parts Drawings

All spares available from

CaterParts®

The Engine Shed
Top Station Road
Brackley
Tel 01280 845344
Fax 01280 845345

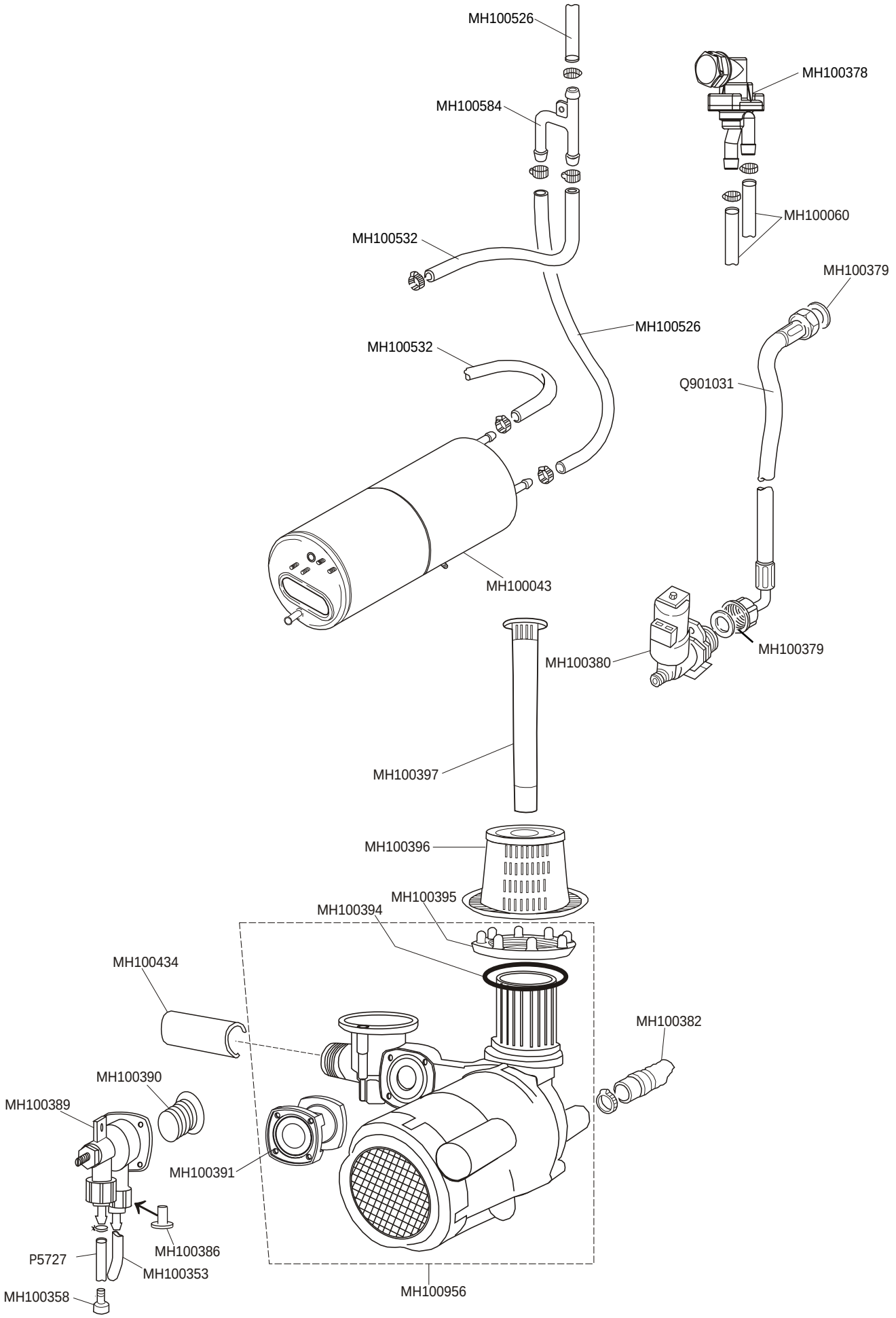
MH100526
MH100378
MH100584
MH100060
MH100532
MH100379
MH100526
MH100532
Q901031
MH100043
MH100380
MH100379
MH100397
MH100396
MH100395
MH100394
MH100434
MH100382
MH100390
MH100389
MH100391
MH100386
P5727
MH100353
MH100358
MH100956

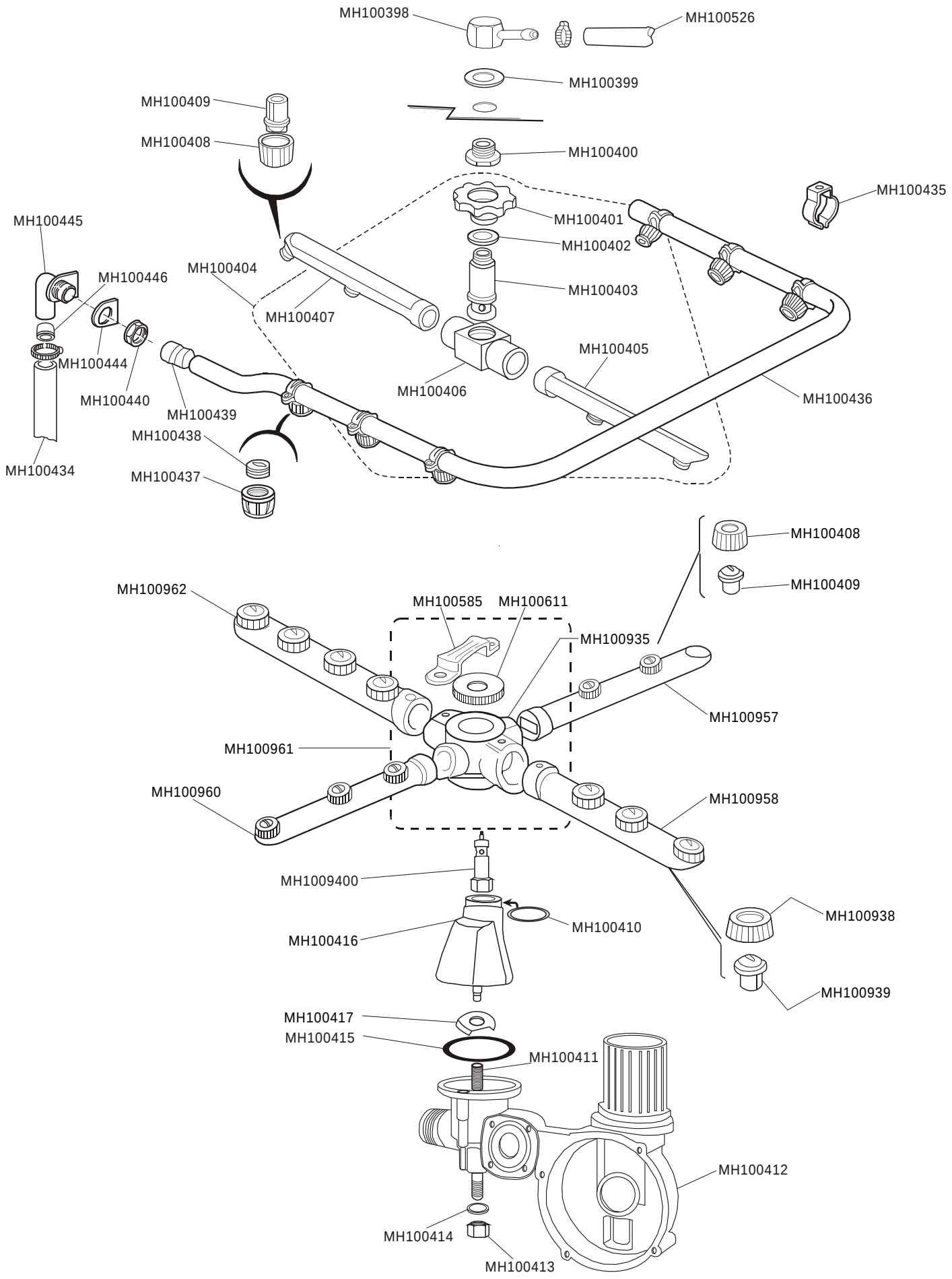
MH100398
MH100526
MH100399
MH100409
MH100408
MH100400
MH100435
MH100401
MH100445
MH100402
MH100404
MH100446
MH100403
MH100407
MH100444
MH100405
MH100440
MH100406
MH100436
MH100439
MH100438
MH100434
MH100437
MH100408
MH100409
MH100962
MH100585
MH100611
MH100935
MH100957
MH100961
MH100960
MH100958
MH1009400
MH100938
MH100410
MH100416
MH100939
MH100417
MH100415
MH100411
MH100412
MH100414
MH100413

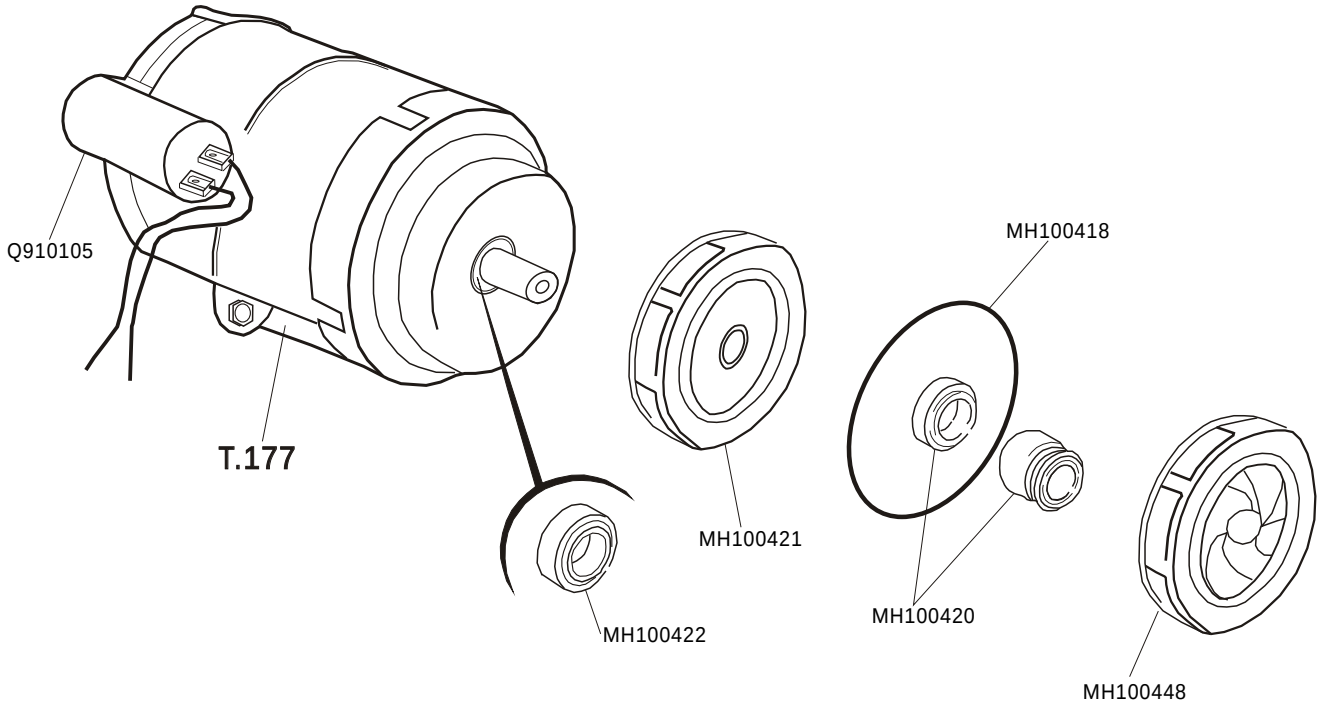
Q910105
T.177
MH100422
MH100421
MH100418
MH100420
MH100448